Document No.	QR4-700-T-003
REV.	A/0

REV.	DESCRIPTION	REVISER	DATE	APPROVED
0		J.Z	11.01.2021	HC.Qiu

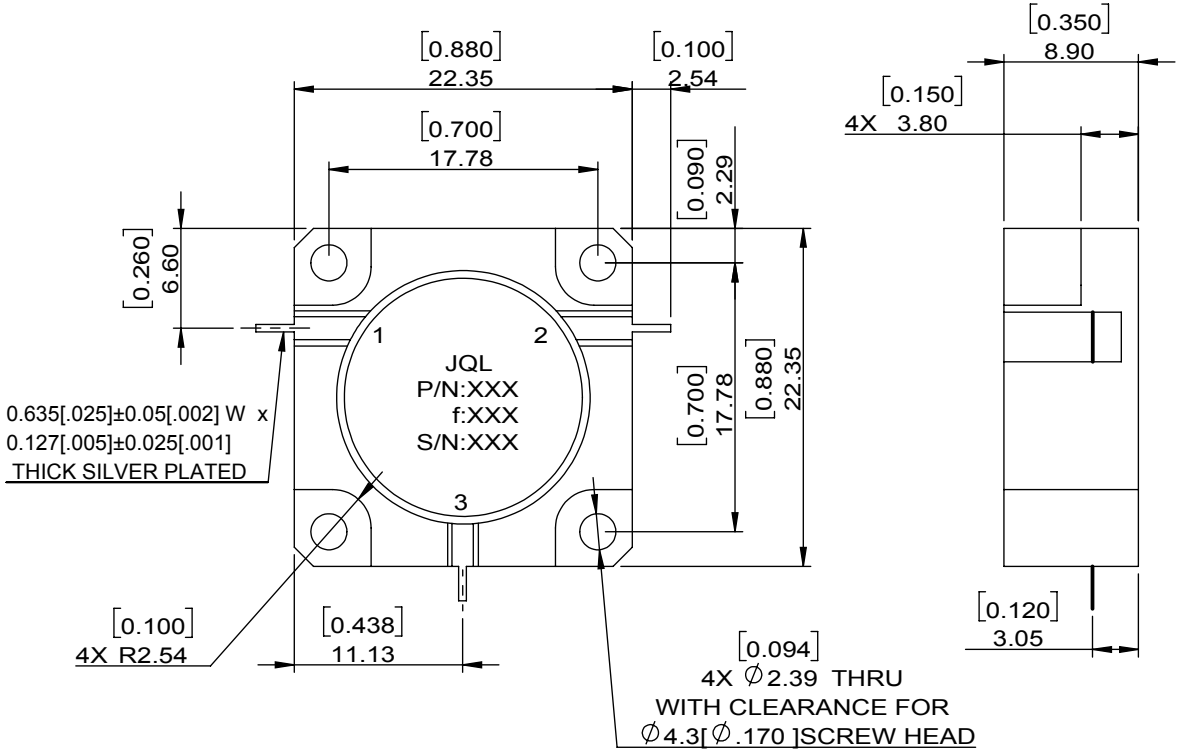

SPECIFICATIONS	
Part's Number	JCD2500T6000BM4
Frequency(GHz)	2.500~6.000
Direction	CW
Insertion Loss(dB)MAX	1.0
Insertion Loss(dB)MAX	1.0 @0dBm, 1.3 @40W CW
Isolation(dB)MIN	15.0
Return Loss(dB)MIN	15.0
3rd IMD(dBc)MAX	-
Power Handling(Watt)	40
Operating Temperature(°C)	-40~+85
Storage Temperature(°C)	-
2nd/3rd Harmonic(dBc)	-
Termination/Attenuator(Watt/dB)	-
Tab(W×LG×THK)(mm[Inch])	
Additional Notes	+/-5° for the insertion loss phase match part to part

JQL Technologies Corporation.

MATERIAL:

DWG NO: JCD2500T6000BM4

SURFACE TREATMENT:

DWG BY:	J.Z	11.01.2021	SCALE
CHK'D BY:			1:1
APPV'D BY:			
Unit: mm[inch]	Tolerance: Liner: ±0.1mm Anguar: ±0.5°	The First:	A4

DESCRIPTION: DROP-IN CIRCULATOR

RoHS COMPLIANCE

This document is the property of JQL Technologies Corporation. It cannot be copied, duplicated, used for manufacturing purposes or communicated to third party as a whole or partly, without the written consent of JQL Technologies Corporation.

WEIGHT: 0.01

SHEET 1 OF 1